3x3m Marquee

50% scale

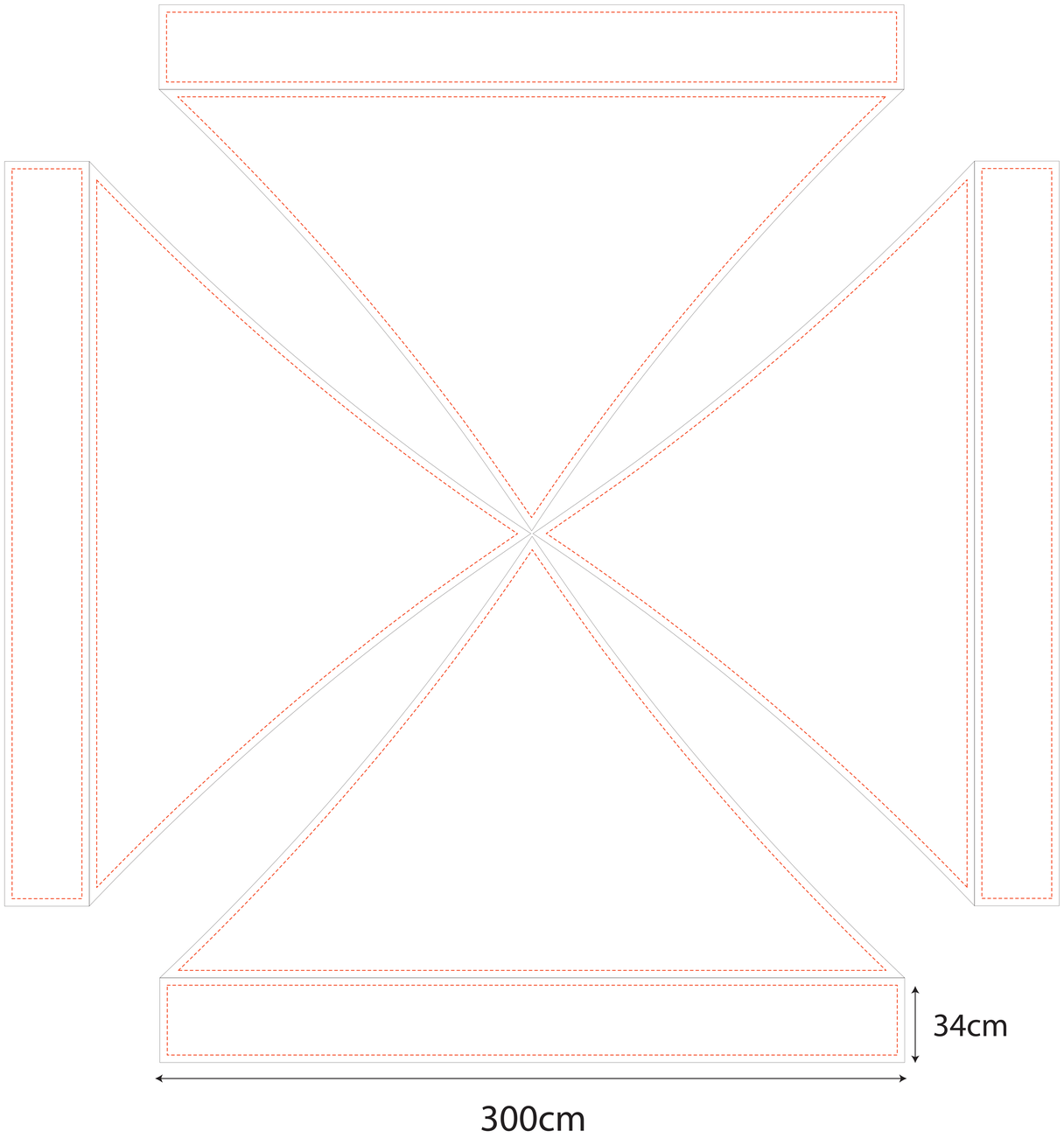

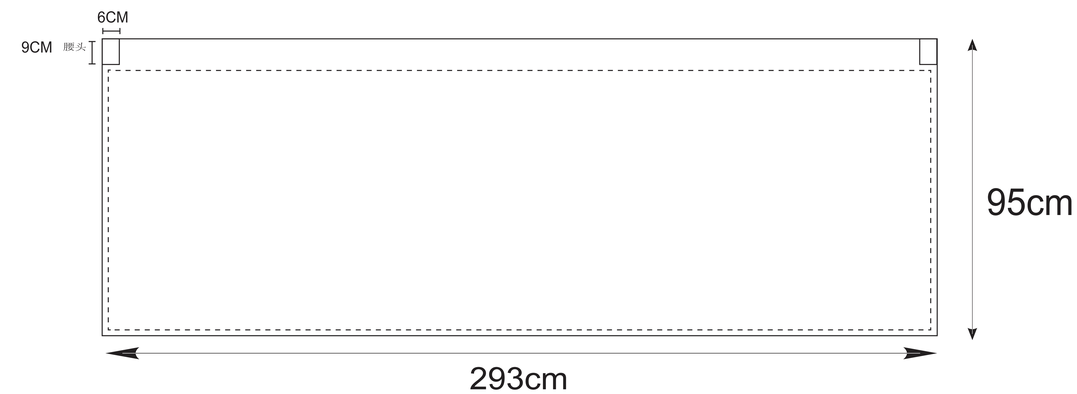
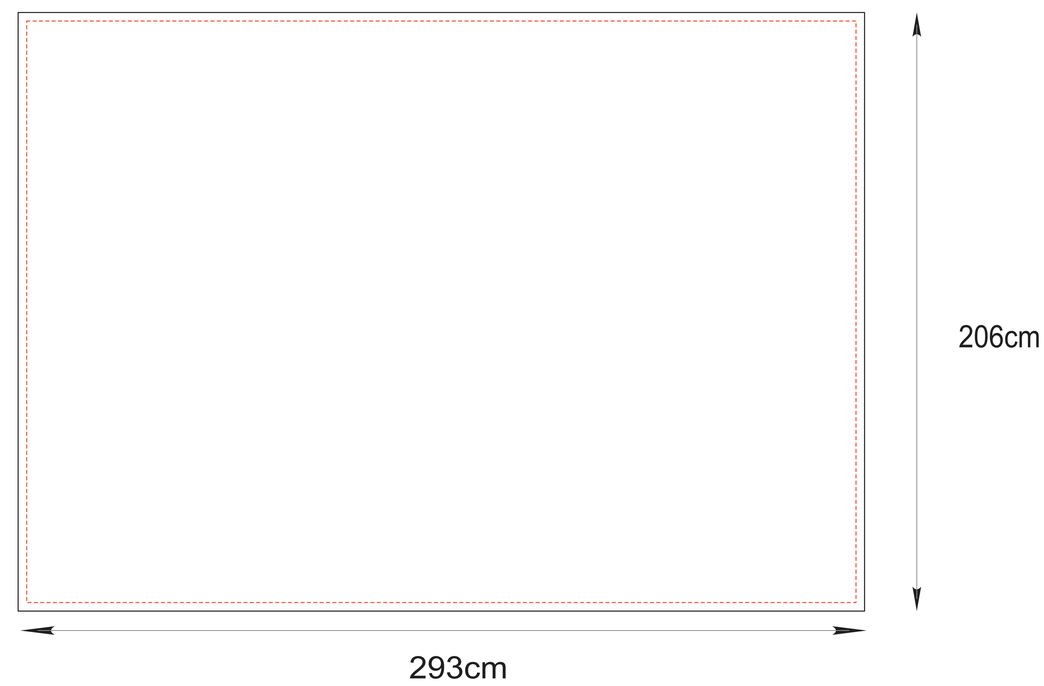
Half Wall
3x3 Back Wall